This drawing contains design and other information which is the property of SpaceAge Control, Inc. Except for rights expressly granted by contract to the United States Government, this drawing and data disclosed herein or herewith is not to be reproduced, used, or disclosed in whole or in part to anyone without the written permission of SpaceAge Control, Inc.

REVISIONS			
REV.	DESCRIPTION	DATE	APPROVED

NOTES: UNLESS OTHERWISE SPECIFIED

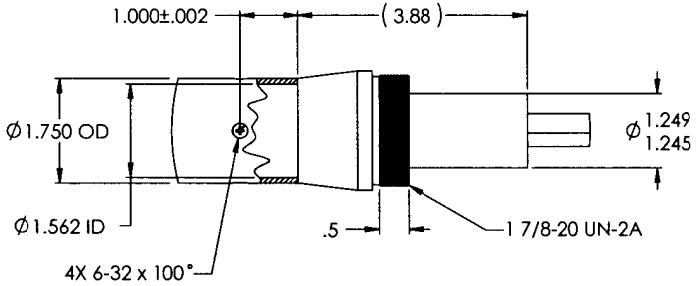

DETAIL A
SCALE 1 : 2

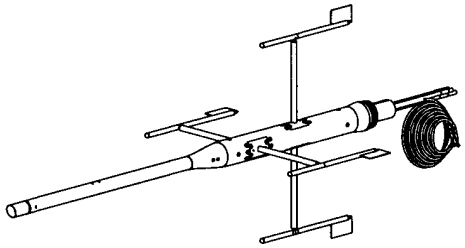

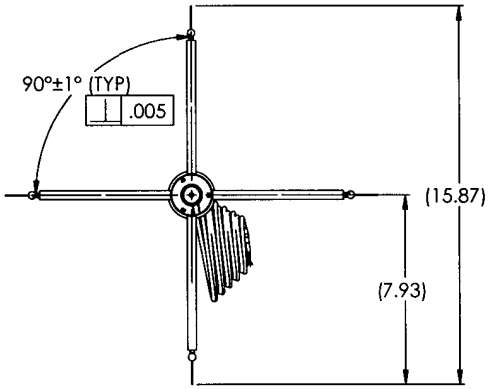

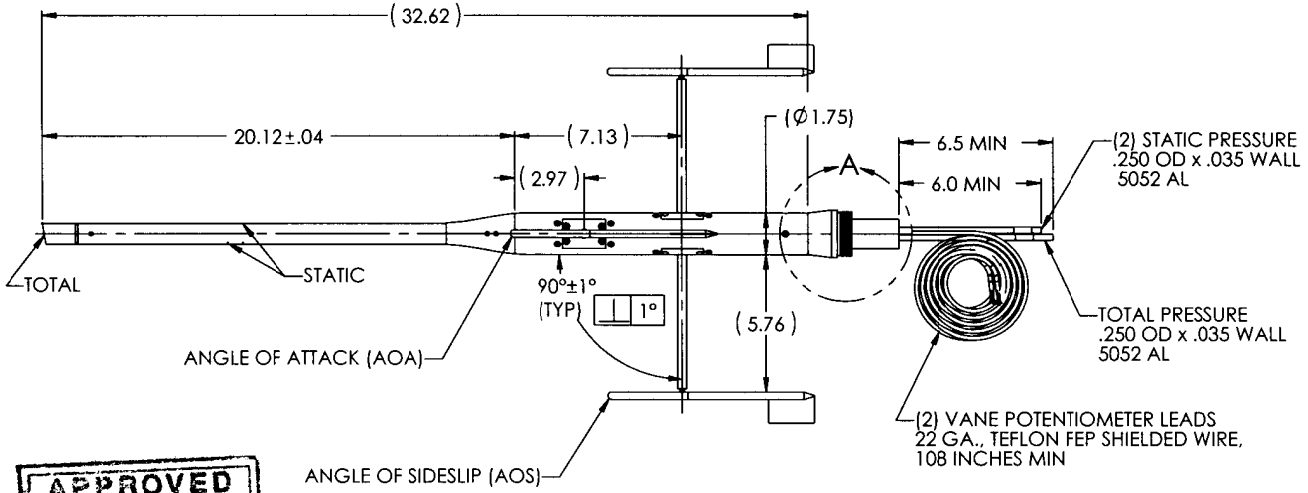

APPROVED
MASTER DRAWING
PRODUCTION RELEASES
NOT VALID WITHOUT THIS STAMP
DATE 9-10-01 BY

QTY REQD	CAGE CODE	PART OR IDENTIFYING NO.	NOMENCLATURE OR DESCRIPTION	MATERIAL SPECIFICATION	ITEM NO.
1		100600-01	STRAIGHT-NOSE AIR DATA BOOM		—

PARTS LIST

NEXT ASSY	USED ON

APPLICATION

UNLESS OTHERWISE SPECIFIED DIMENSIONS ARE IN INCHES TOLERANCES ARE:
DECIMALS X.X ± 0.03, X.XX ± 0.01, X.XXX ± 0.005
ANGLES X° ± 30'
DO NOT SCALE DRAWING
MATERIAL --
FINISH --
CAD GENERATED DRAWING DO NOT MANUALLY UPDATE

PROJECT 78

APPROVALS	DATE
DRAWN	9-10-01
CHECKED	9-11-01
ENG	9-11-01
MFG	

SpaceAge Control, Inc.

STRAIGHT-NOSE AIR DATA BOOM

SIZE	CAGE CODE	DWG. NO.	REV.
B	34851	100600-01	

SCALE 1:5 CAD FILE: SHEET 1 OF 2